# FINION SURFACE-MOUNTED WASHBASIN RECTANGLE

## PRODUCT INFORMATION

| | |
|---|---|
| Article title | Villeroy & Boch Finion Surface-mounted washbasin, 600 x 445 x 115 mm, Stone White CeramicPlus, with concealed overflow |
| Article number | 414264RW |
| Assembly / Assembly type | Surface-mounted |
| Assembly instructions | Recommendation: to be installed with a gap of at least 35 mm between the washbasin and the wall |
| Scope of delivery | 1 x surface-mounted washbasin , 1 x concealed ViFlow overflow with ceramic valve cover 1 x fastening set 1 x cut-out template |
| Depth in mm | 445 |
| Width in mm | 600 |
| Height in mm | 115 |
| Interior depth | 100 |
| Collection | Finion |
| Suitable for | 3-hole mixer, Matching Villeroy&Boch furniture |
| Material | TitanCeram |
| surface | matt |
| Colour name | Stone White CeramicPlus |
| With overflow | Yes |
| Shape | Rectangle |
| Colour designation | Stone White |
| Antibacterial surface (with AntiBac) | No |
| Easy surface cleaning (CeramicPlus) | Yes |
| Number of tap holes punched through | 1 |
| Number of tap holes pre-drilled | 2 |
| Underside of washbasin | unground |
| Number of bowls | 1 |

## TECHNICAL DRAWINGS

**414264RW**

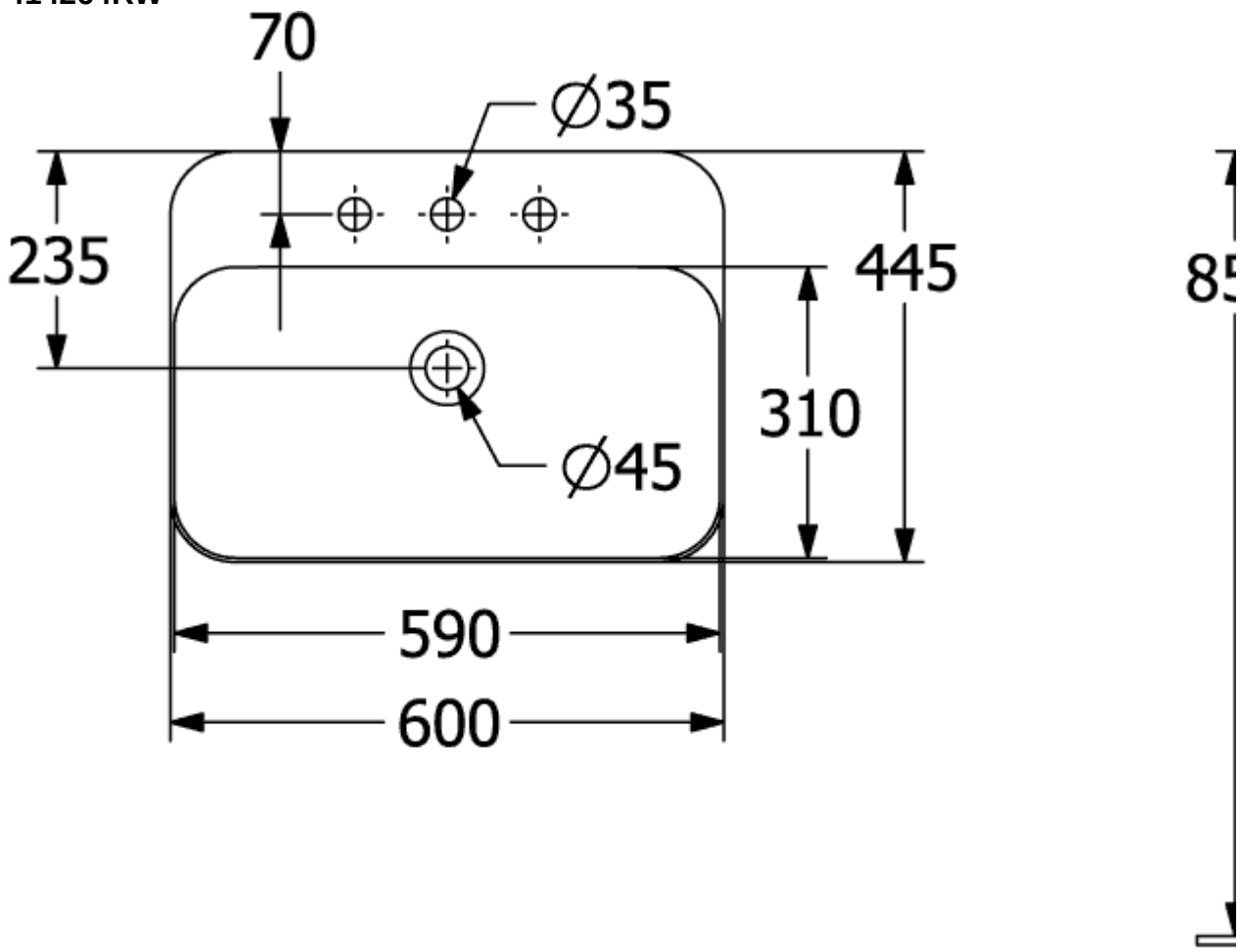

**414264RW**

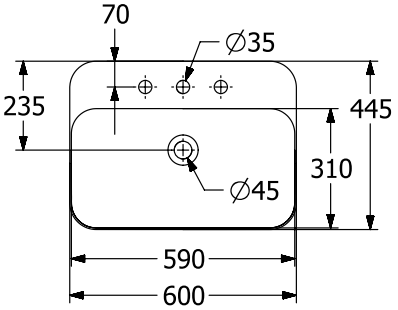
70
∅35
235
445
310
∅45
590
600

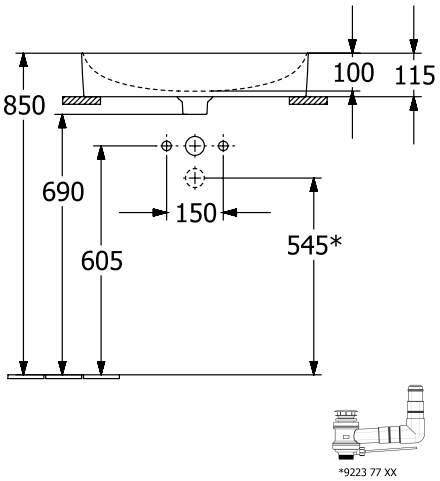
100
115
850
690
150
605
545*
*9223 77 XX