FINION SURFACE-MOUNTED WASHBASIN RECTANGLE

PRODUCT INFORMATION

Article title	Villeroy & Boch Finion Surface-mounted washbasin, 600 x 445 x 115 mm, Stone White CeramicPlus, without overflow
Article number	414261RW
Assembly / Assembly type	Surface-mounted
Assembly instructions	Recommendation: to be installed with a gap of at least 35 mm between the washbasin and the wall
Scope of delivery	1 x surface-mounted washbasin , 1 x non-closing outlet valve with ceramic valve cover 1 x fastening set 1 x cut-out template
Depth in mm	445
Width in mm	600
Height in mm	115
Interior depth	100
Collection	Finion
Suitable for	3-hole mixer, Matching Villeroy&Boch furniture
Material	TitanCeram
surface	matt
Colour name	Stone White CeramicPlus
With overflow	No
Shape	Rectangle
Colour designation	Stone White
Antibacterial surface (with AntiBac)	No
Easy surface cleaning (CeramicPlus)	Yes
Number of tap holes punched through	1
Number of tap holes pre-drilled	2
Underside of washbasin	unground
Number of bowls	1

TECHNICAL DRAWINGS

414261RW

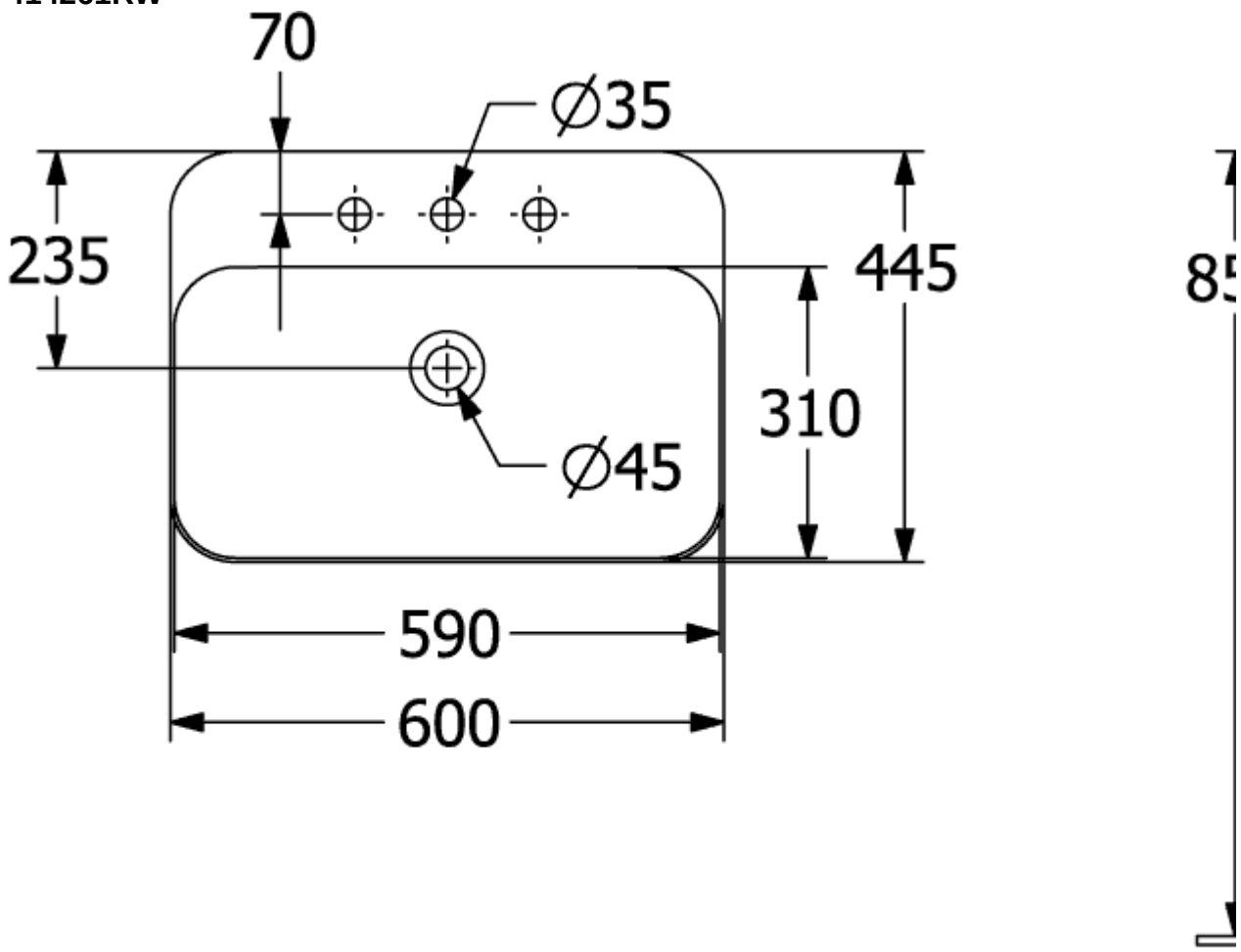

414261RW

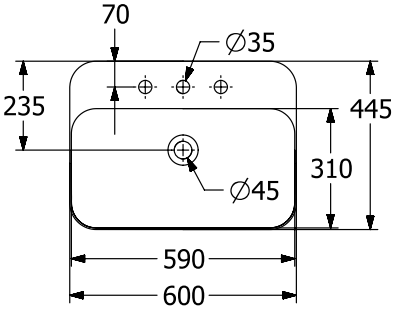
70
∅35
235
445
310
∅45
590
600

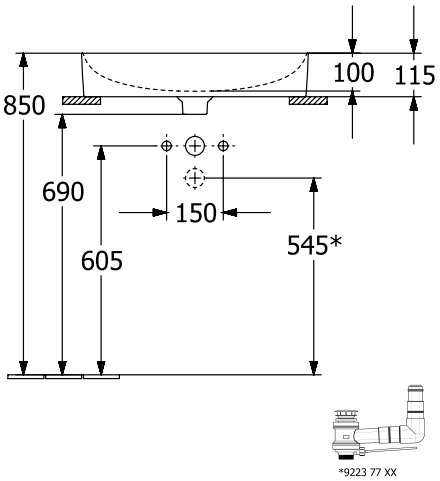
100
115
850
690
150
605
545*
*9223 77 XX